MPC-Cross channel connectors

galvanised

Application

- For cross-connections in pre-wall installations and for shelves made from MPC-Support channels

Your advantages

- Easy-to-install connection elements for setting up structures with the measured calculated static loads using MPC-Support channels
- Greater flexibility when setting up structures made from channels
- For rotation-resistant attachment to building structure

For profiles 28/30

For profiles 38/40, 38/48, 39/52, 40/60, 40/80, 38/80 and 40/120

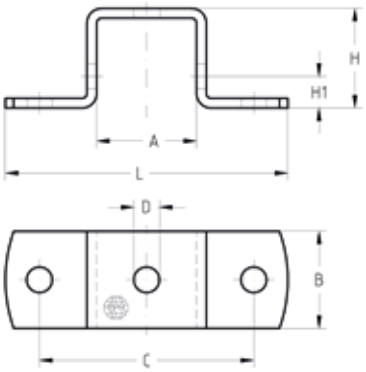

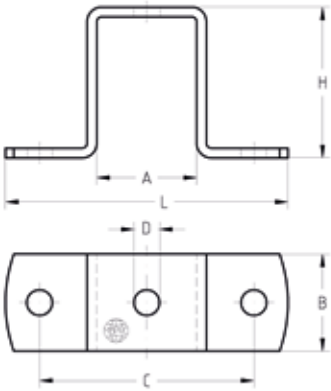

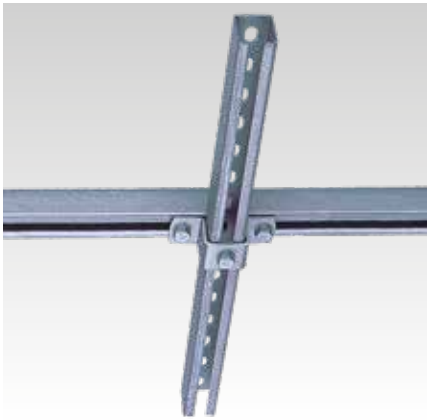

For profiles	Dimensions [mm]							Part no.	Sales unit	Pack unit
	A	B	C	D	H	H1	L			
28/30	31	25	80	9	31	13	104	**118243**	25	Pieces
38/40	41	40		11	41	18	121	**118246**		
38/48					49	-		**144838**		
39/52					53			**145069**		
40/60					62			**118316**		
38/80, 40/80					82			**118276**		
40/120					122			**118284**		

07/2023

© MÜPRO - progress and quality